| REVISIONS | | | | | |
|---|---|---|---|---|---|
| REV. | DESCRIPTION | REV. BY | NO. | DATE | APV'D |
| 06 | ADDED SECTION C-C WITH DIMENSIONS FOR ADDED SLOT | A.A.S. | 120034 | 01/14/2019 | |

ASSEMBLED HARNESS RING
SEE NOTE 1

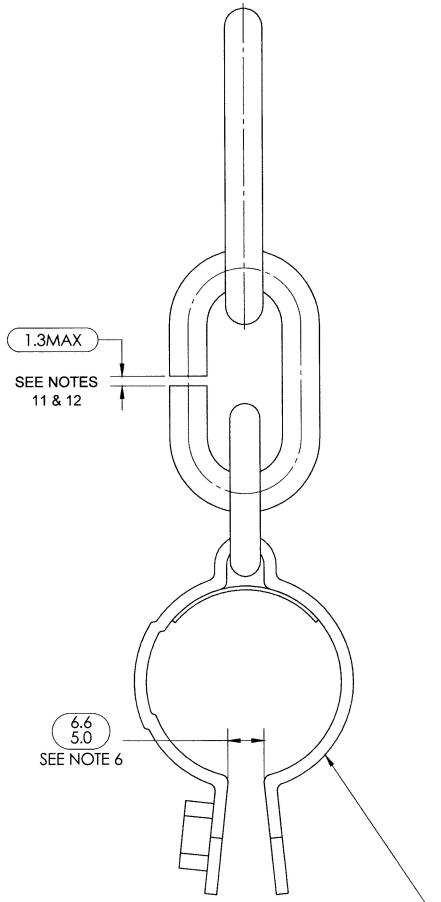


ASSEMBLY SCREW THREAD ENGAGEMENT
SEE NOTE 7

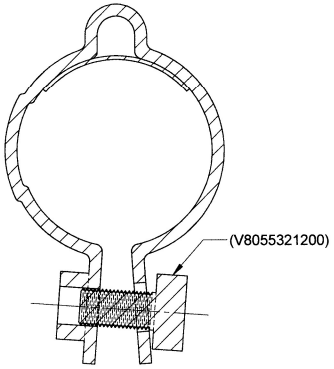


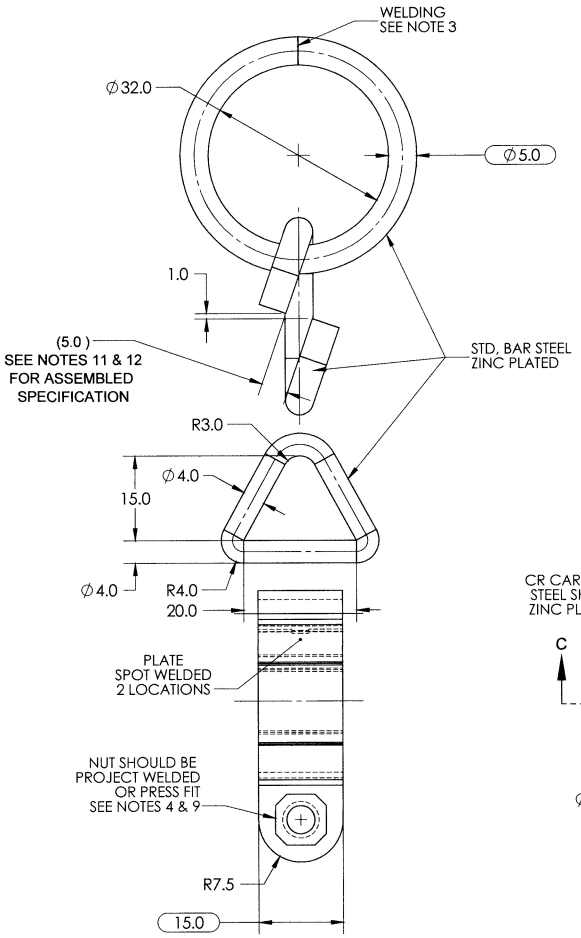


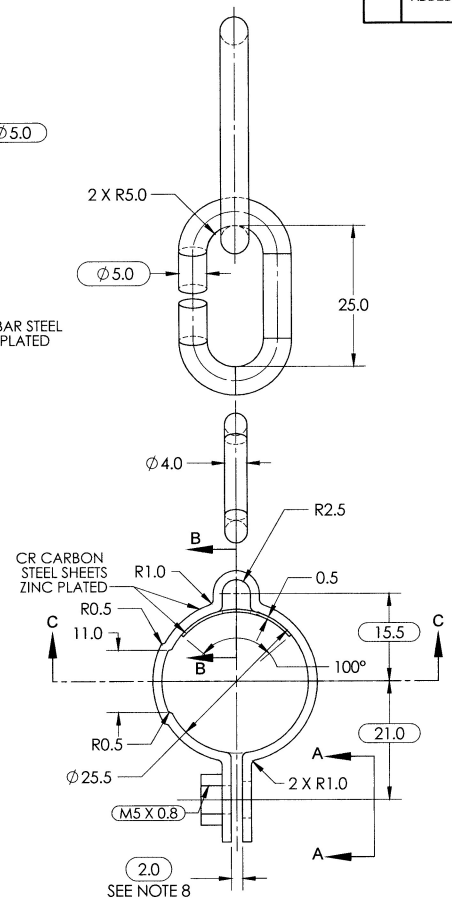


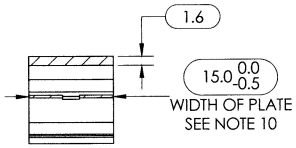


SECTION B-B
SCALE 1.5 : 1

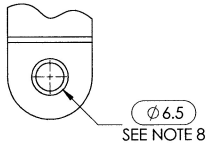


VIEW A-A
SCALE 1.5 : 1

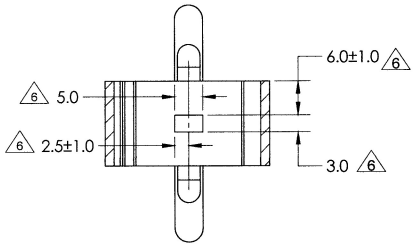


SECTION C-C
SCALE 1.5 : 1

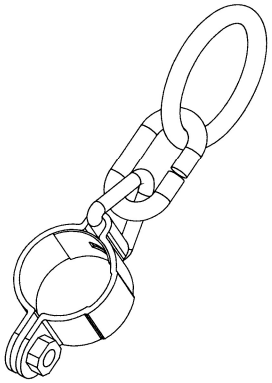

NOTE:
1. PART TO BE RECEIVED ASSEMBLED AS SHOWN.
2. MATERIALS AND FINISH CALLED OUT ON LEADERS.
3. WELD MUST WITHSTAND 2000 N PULL FORCE.
4. NUT MUST WITHSTAND 1000 N PULL FORCE.
5. DIMENSIONS MARKED WITH ( ) ARE CRITICAL FOR QC INSPECTION.
6. CLAMPING BAND INSPECTION: CLAMPING BAND GAP MEASURED USING PIN GAUGE IN PART'S FREE STATE AS RECEIVED.
7. ASSEMBLY SCREW (V8055321200) MUST ENGAGE 2 THREADS (MIN) OF NUT WITH NO CROSSTHREADING WHEN CLAMPING BAND IS IN FREE STATE CONDITION.
8. WHEN PART IS PLACED ON Ø25.00 MM GAGE OR EQUIVALENT AND TABS ARE PRESSED TOGETHER ON A 2.00 mm BLOCK, HOLE MUST BE IN ALIGNMENT WITH ID OF NUT.
9. NUT DOES NOT NEED TO BE 4-SIDED.
10. MAXIMUM OVERHANG OF PLATE BEYOND EDGE OF CLAMPING BAND ON EITHER SIDE: 0.8 mm
11. MAX SPACE BETWEEN SURFACES MEASURED WITH FEELER GAUGE
12. OFFSET OF DIAMETERS OF END SURFACES NOT TO EXCEED 2 MM.

**PRODUCTION RELEASED**

| | | | |
|---|---|---|---|
| MATERIAL: SEE NOTES | STANDARD TOLERANCES: (UNLESS OTHERWISE SPECIFIED) UNITS: MM X ± 0.40, X.X ± 0.40, X.XX ± 0.25, X.XXX ± 0.12, X ± 2°, X.X ± 1° | DATE: 04/04/2016 | DRAWN BY: A.A.S. |
| | | PART DESCRIPTION: RING HARNESS | |
| | | EXTENDED DESCRIPTION: | |
| FINISH: SEE NOTES | FILE NAME: C6462020100 | PART NUMBER: C6462020106 | |
| | SHEET SIZE: C | DO NOT SCALE PRINT | SHEET 1 OF 1 |